=25℃ (unless otherwise specified)

=25℃
=100℃
=25℃

±

=25℃

℃

℃/W
℃/W

=±20V, V

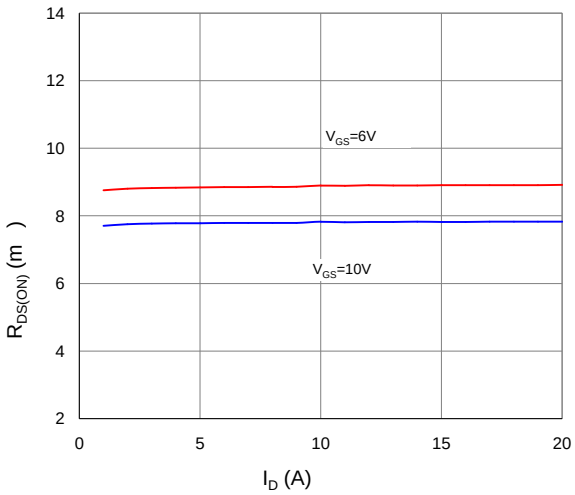
14
12
10
8
6
4
2
0
5
10
15
20
$V_{GS}$=6V
$V_{GS}$=10V
$R_{DS(ON)}$ (m )
$I_D$ (A)

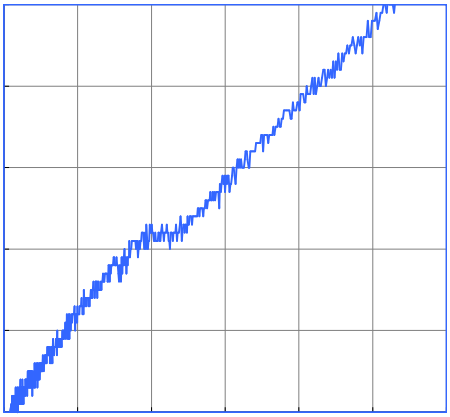

+
-

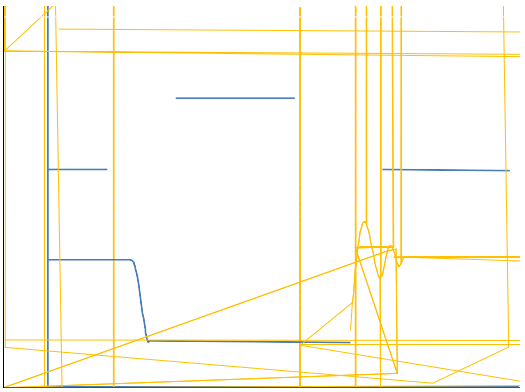

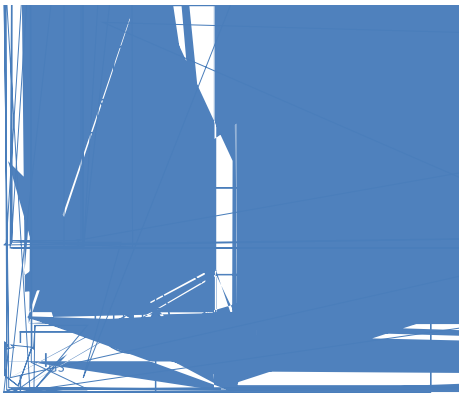

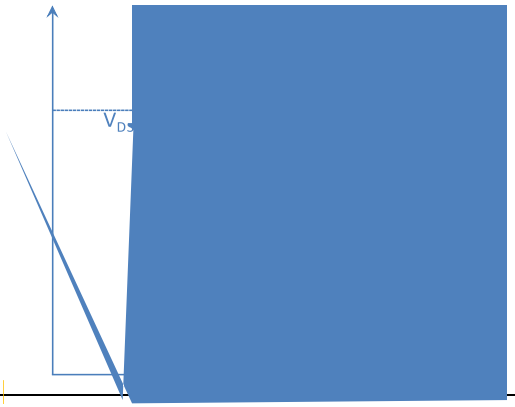
$V_{DS}$

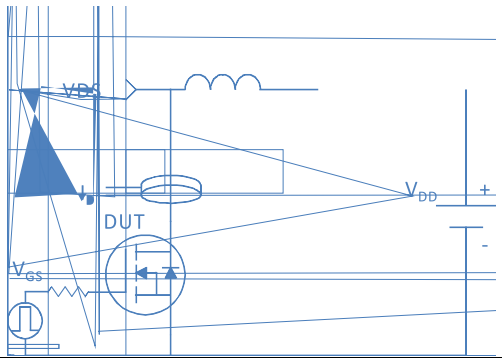
VDS
$I_D$
DUT
$V_{DD}$
+
-
$V_{GS}$

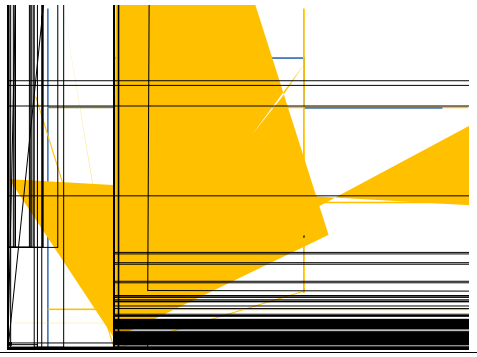

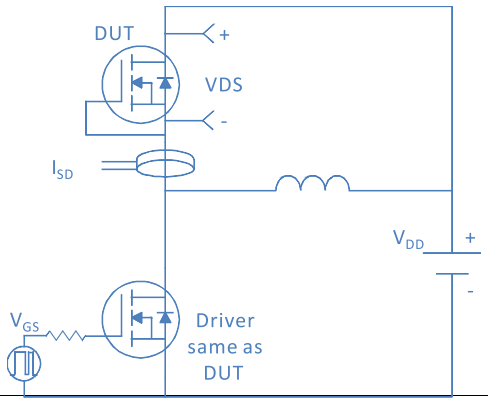
DUT
+
VDS
-
$I_{SD}$
$V_{DD}$
+
-
$V_{GS}$
Driver
same as
DUT

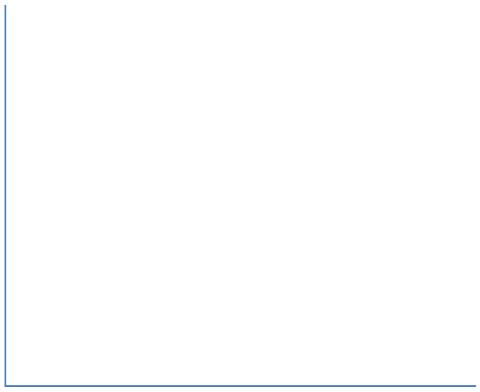

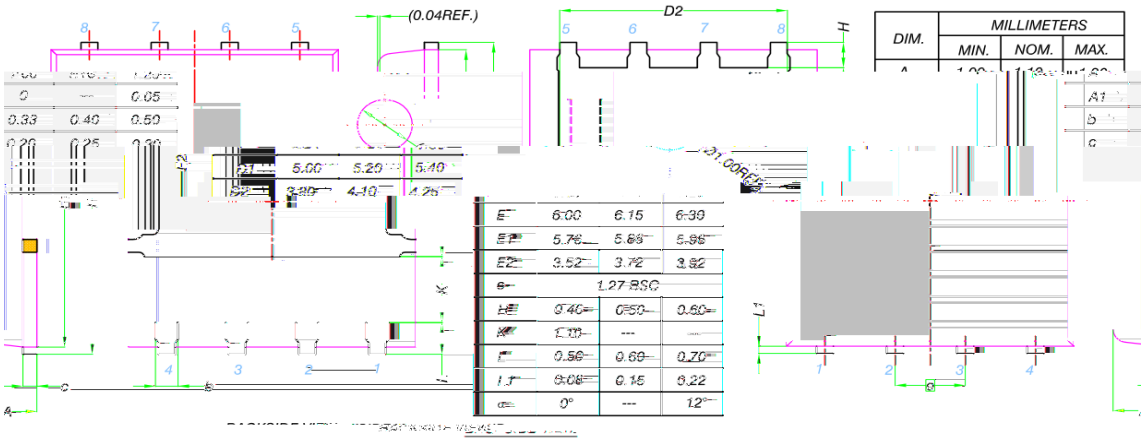
(0.04REF.)
D2
DIM.
MILLIMETERS
MIN.
NOM.
MAX.
0.05
0.33
0.40
0.50
5.00
5.20
5.40
4.10
6.00
6.15
6.30
5.76
5.86
5.96
3.52
3.72
3.92
1.27 BSC
0.40
0.50
0.60
0.56
0.60
0.70
0.08
0.15
0.22
0°
12°
A1
b
c
L1
H
K

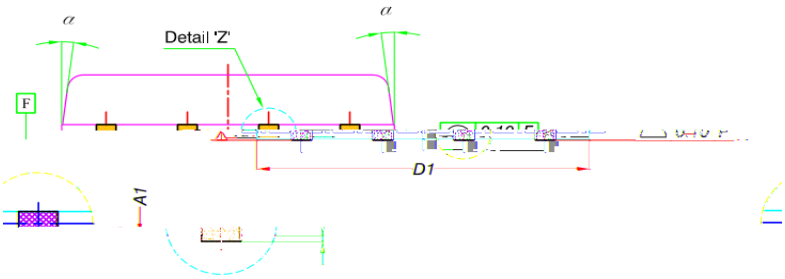
a
a
Detail 'Z'
F
D1
A1

Detail 'Z'